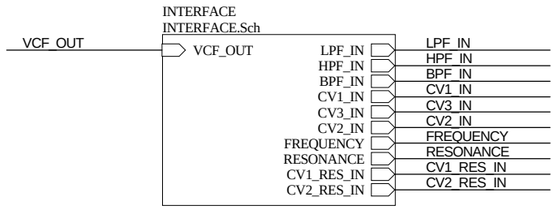
INTERFACE
INTERFACE.Sch
VCF_OUT
VCF_OUT
LPF_IN
HPF_IN
BPF_IN
CV1_IN
CV3_IN
CV2_IN
FREQUENCY
RESONANCE
CV1_RES_IN
CV2_RES_IN
LPF_IN
HPF_IN
BPF_IN
CV1_IN
CV3_IN
CV2_IN
FREQUENCY
RESONANCE
CV1_RES_IN
CV2_RES_IN

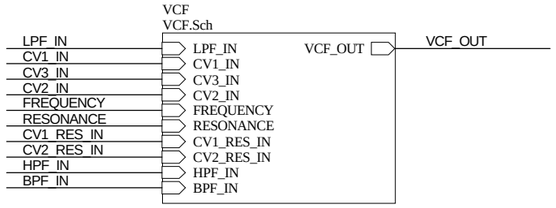
VCF
VCF.Sch
LPF_IN
CV1_IN
CV3_IN
CV2_IN
FREQUENCY
RESONANCE
CV1_RES_IN
CV2_RES_IN
HPF_IN
BPF_IN
LPF_IN
CV1_IN
CV3_IN
CV2_IN
FREQUENCY
RESONANCE
CV1_RES_IN
CV2_RES_IN
HPF_IN
BPF_IN
VCF_OUT
VCF_OUT

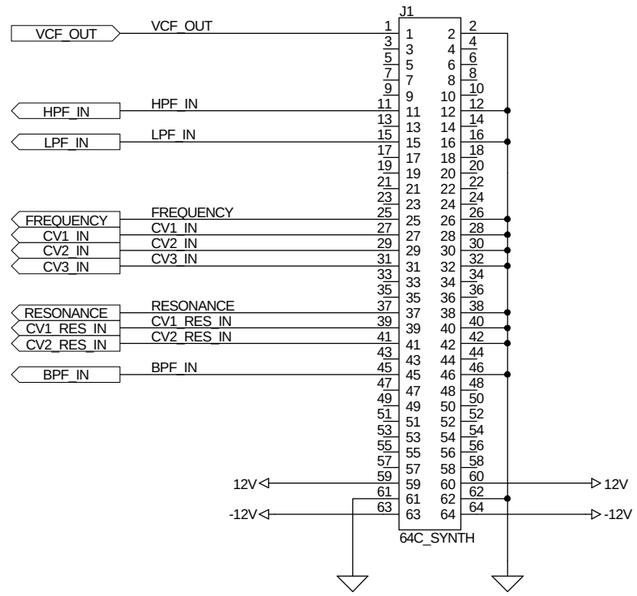
J1
VCF_OUT
HPF_IN
LPF_IN
FREQUENCY
CV1_IN
CV2_IN
CV3_IN
RESONANCE
CV1_RES_IN
CV2_RES_IN
BPF_IN
12V
-12V
64C_SYNTH

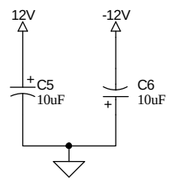
12V
-12V
C5
10uF
C6
10uF

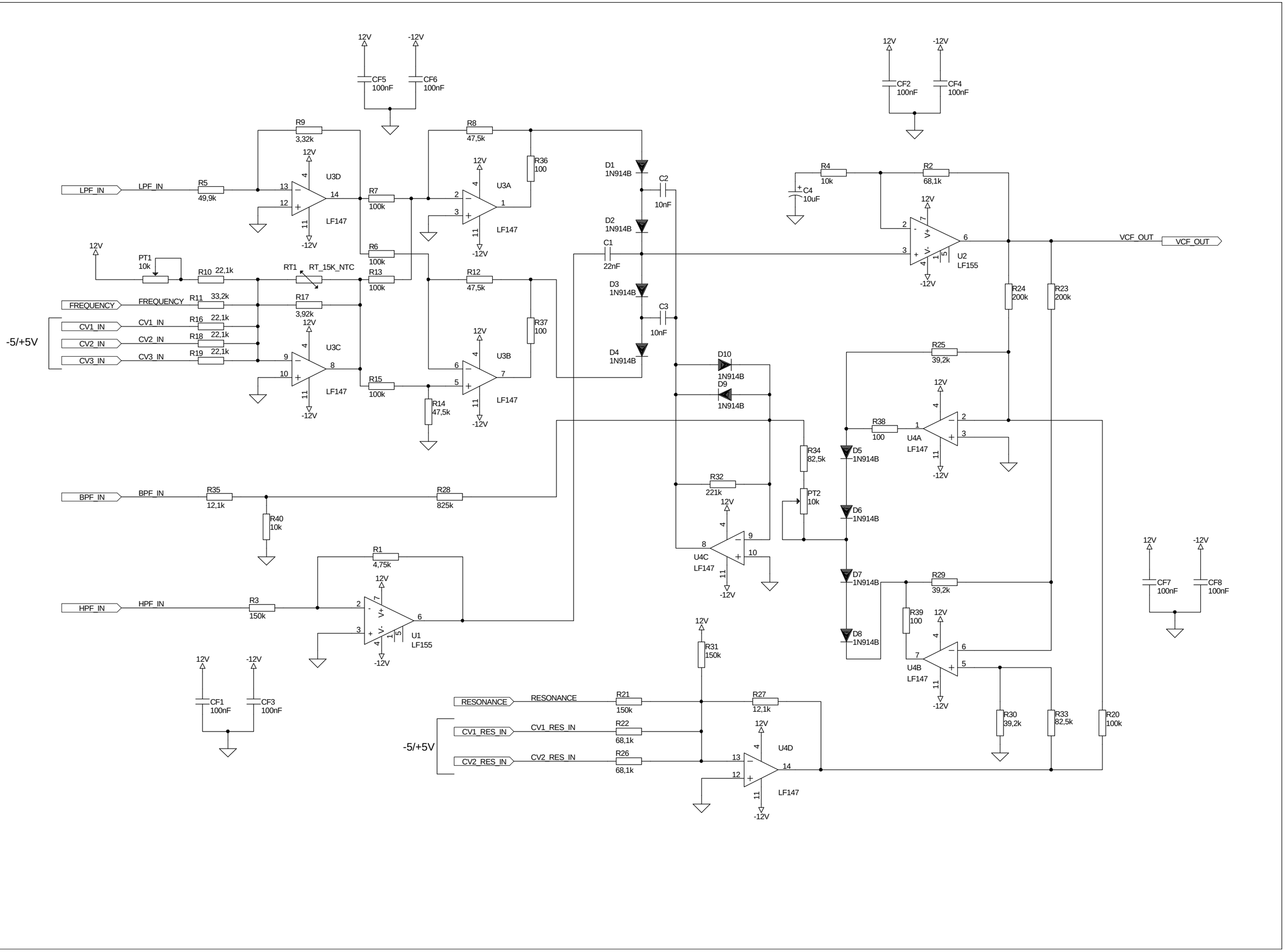
12V
-12V
CF5 100nF
CF6 100nF
CF2 100nF
CF4 100nF
R9 3,32k
R8 47,5k
R36 100
U3D
U3A
LF147
LPF_IN
LPF_IN
R5 49,9k
R7 100k
R6 100k
R13 100k
R12 47,5k
PT1 10k
R10 22,1k
RT1
RT_15K_NTC
FREQUENCY
FREQUENCY
R11 33,2k
R17 3,92k
CV1_IN
CV1_IN
R16 22,1k
CV2_IN
CV2_IN
R18 22,1k
CV3_IN
CV3_IN
R19 22,1k
-5/+5V
U3C
U3B
R37 100
R15 100k
R14 47,5k
D1 1N914B
D2 1N914B
D3 1N914B
D4 1N914B
C1 22nF
C2 10nF
C3 10nF
R4 10k
C4 10uF
R2 68,1k
U2 LF155
VCF_OUT
VCF_OUT
R24 200k
R23 200k
R25 39,2k
D10 1N914B
D9 1N914B
R38 100
U4A
D5 1N914B
R34 82,5k
PT2 10k
R32 221k
D6 1N914B
U4C
D7 1N914B
R29 39,2k
D8 1N914B
R39 100
U4B
R30 39,2k
R33 82,5k
R20 100k
CF7 100nF
CF8 100nF
BPF_IN
BPF_IN
R35 12,1k
R28 825k
R40 10k
R1 4,75k
HPF_IN
HPF_IN
R3 150k
U1 LF155
CF1 100nF
CF3 100nF
R31 150k
RESONANCE
RESONANCE
R21 150k
R27 12,1k
CV1_RES_IN
CV1_RES_IN
R22 68,1k
-5/+5V
CV2_RES_IN
CV2_RES_IN
R26 68,1k
U4D
LF147