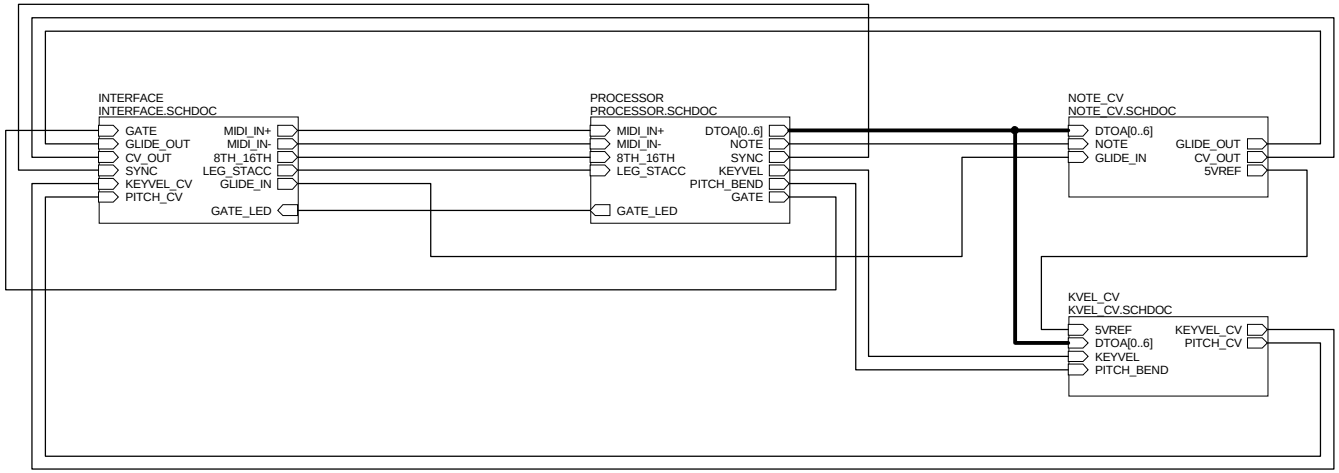
INTERFACE
INTERFACE.SCHDOC
GATE
GLIDE_OUT
CV_OUT
SYNC
KEYVEL_CV
PITCH_CV
MIDI_IN+
MIDI_IN-
8TH_16TH
LEG_STACC
GLIDE_IN
GATE_LED
PROCESSOR
PROCESSOR.SCHDOC
MIDI_IN+
MIDI_IN-
8TH_16TH
LEG_STACC
GATE_LED
DTOA[0..6]
NOTE
SYNC
KEYVEL
PITCH_BEND
GATE
NOTE_CV
NOTE_CV.SCHDOC
DTOA[0..6]
NOTE
GLIDE_IN
GLIDE_OUT
CV_OUT
5VREF
KVEL_CV
KVEL_CV.SCHDOC
5VREF
DTOA[0..6]
KEYVEL
PITCH_BEND
KEYVEL_CV
PITCH_CV

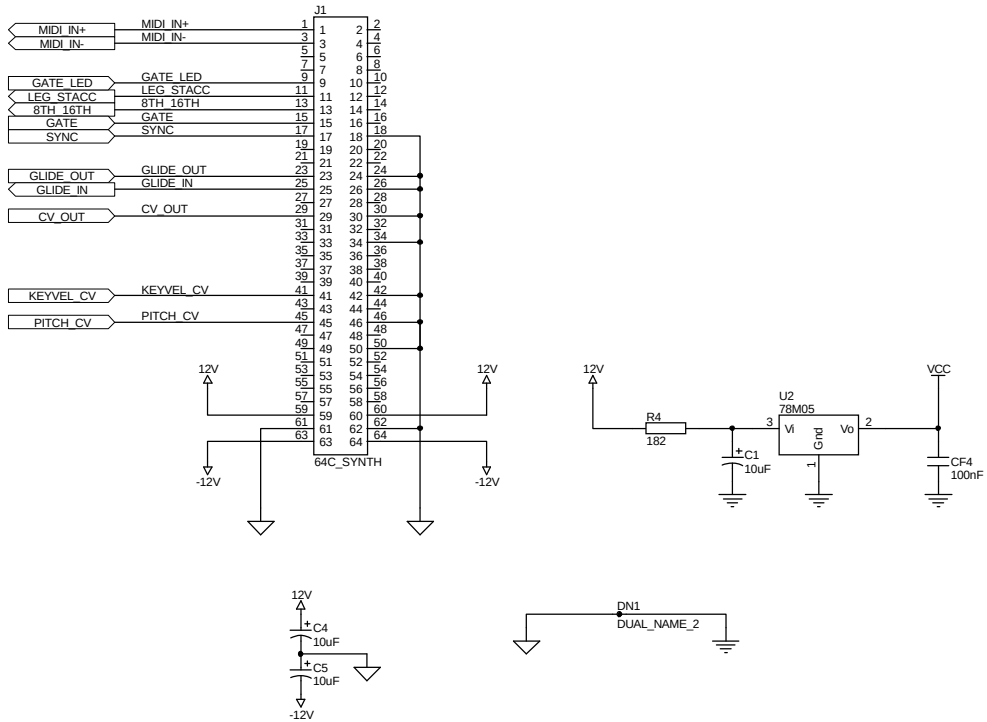
J1
MIDI_IN+
MIDI_IN-
GATE_LED
LEG_STACC
8TH_16TH
GATE
SYNC
GLIDE_OUT
GLIDE_IN
CV_OUT
KEYVEL_CV
PITCH_CV
64C_SYNTH
12V
-12V
R4
182
C1
10uF
U2
78M05
Vi
Gnd
Vo
VCC
CF4
100nF
C4
10uF
C5
10uF
DN1
DUAL_NAME_2

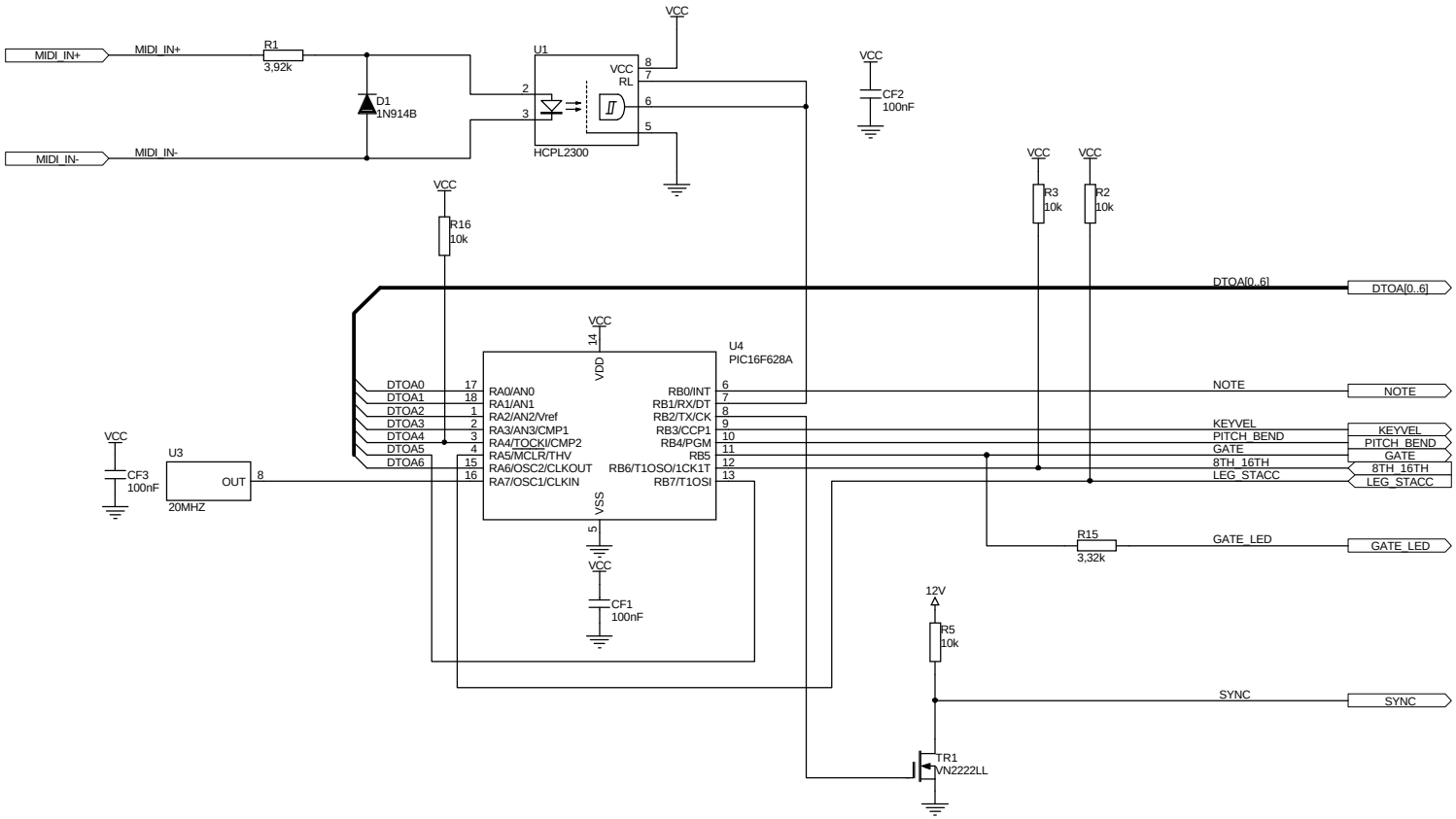
MIDI_IN+
MIDI_IN+
R1
3,92k
D1
1N914B
MIDI_IN-
MIDI_IN-
U1
VCC
VCC
RL
HCPL2300
VCC
CF2
100nF
VCC
R16
10k
VCC
R3
10k
VCC
R2
10k
DTOA[0..6]
DTOA[0..6]
VCC
U4
PIC16F628A
VDD
VSS
DTOA0
DTOA1
DTOA2
DTOA3
DTOA4
DTOA5
DTOA6
RA0/AN0
RA1/AN1
RA2/AN2/Vref
RA3/AN3/CMP1
RA4/TOCKI/CMP2
RA5/MCLR/THV
RA6/OSC2/CLKOUT
RA7/OSC1/CLKIN
RB0/INT
RB1/RX/DT
RB2/TX/CK
RB3/CCP1
RB4/PGM
RB5
RB6/T1OSO/1CK1T
RB7/T1OSI
NOTE
NOTE
KEYVEL
KEYVEL
PITCH_BEND
PITCH_BEND
GATE
GATE
8TH_16TH
8TH_16TH
LEG_STACC
LEG_STACC
VCC
CF3
100nF
U3
OUT
20MHZ
R15
3,32k
GATE_LED
GATE_LED
VCC
CF1
100nF
12V
R5
10k
SYNC
SYNC
TR1
VN2222LL

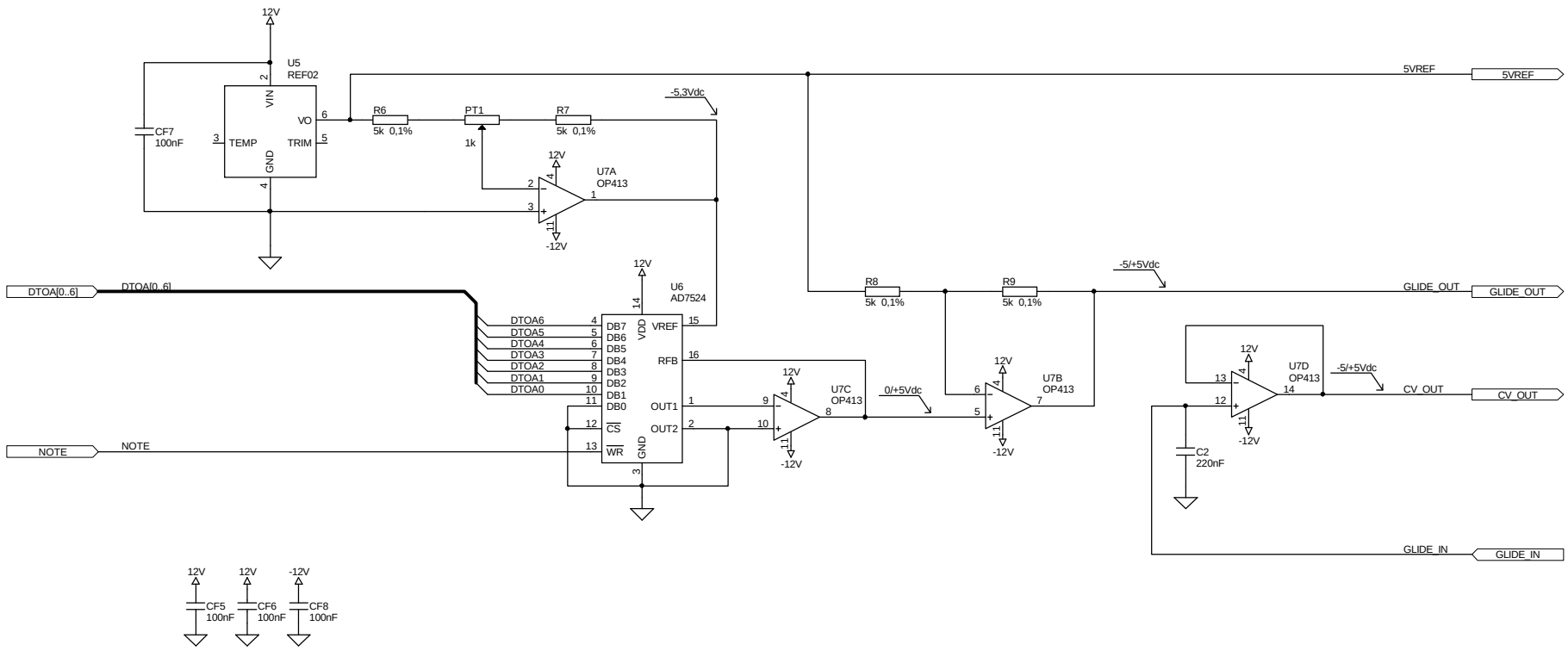
12V
U5
REF02
VIN
VO
TEMP
TRIM
GND
CF7
100nF
R6
5k 0,1%
PT1
1k
R7
5k 0,1%
-5,3Vdc
U7A
OP413
-12V
5VREF
5VREF
DTOA[0..6]
DTOA[0..6]
U6
AD7524
DTOA6
DTOA5
DTOA4
DTOA3
DTOA2
DTOA1
DTOA0
DB7
DB6
DB5
DB4
DB3
DB2
DB1
DB0
CS
WR
VDD
VREF
RFB
OUT1
OUT2
GND
NOTE
NOTE
U7C
OP413
0/+5Vdc
R8
5k 0,1%
R9
5k 0,1%
-5/+5Vdc
U7B
OP413
GLIDE_OUT
GLIDE_OUT
U7D
OP413
-5/+5Vdc
CV_OUT
CV_OUT
C2
220nF
GLIDE_IN
GLIDE_IN
-12V
CF5
100nF
CF6
100nF
CF8
100nF

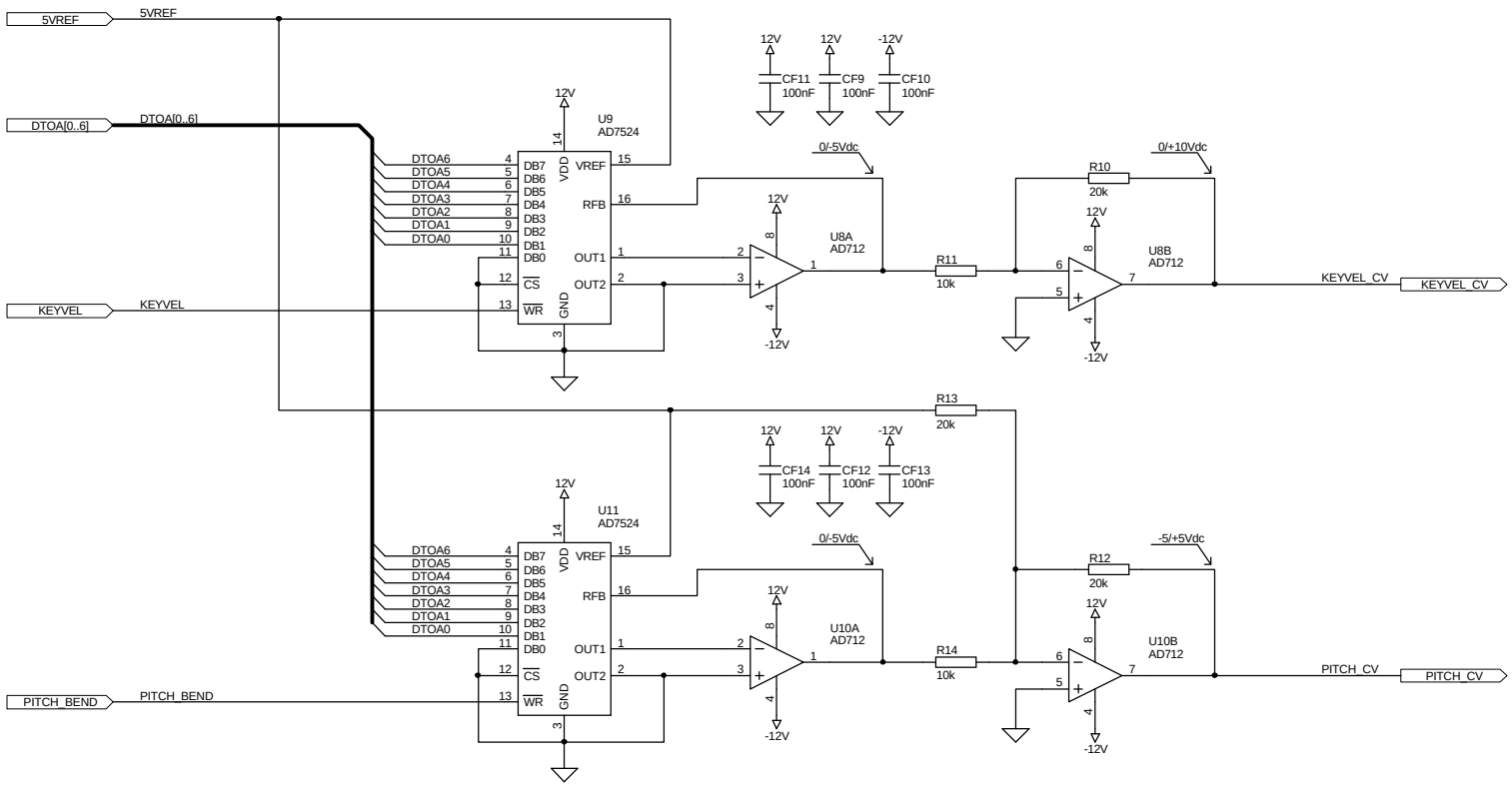
5VREF
DTOA[0..6]
KEYVEL
PITCH_BEND
U9
AD7524
U11
AD7524
VDD
VREF
RFB
OUT1
OUT2
GND
CS
WR
DB7
DB6
DB5
DB4
DB3
DB2
DB1
DB0
DTOA6
DTOA5
DTOA4
DTOA3
DTOA2
DTOA1
DTOA0
12V
-12V
CF11 100nF
CF9 100nF
CF10 100nF
CF14 100nF
CF12 100nF
CF13 100nF
0/-5Vdc
0/+10Vdc
-5/+5Vdc
U8A
AD712
U8B
AD712
U10A
AD712
U10B
AD712
R10 20k
R11 10k
R12 20k
R13 20k
R14 10k
KEYVEL_CV
PITCH_CV